QUICKLUBER
USER GUIDE

READ MORE PRINT

DOWNLOAD TECHNICAL DATA SHEET

DOWNLOAD USER GUIDE

DIMENSIONS

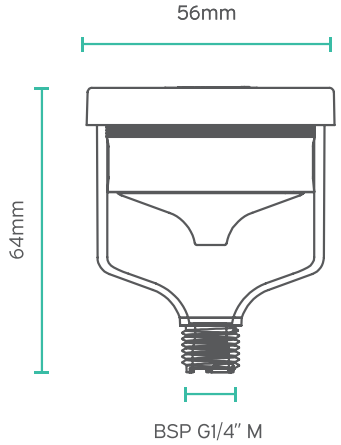

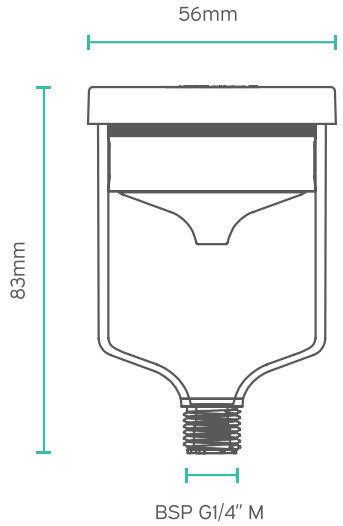

120cc

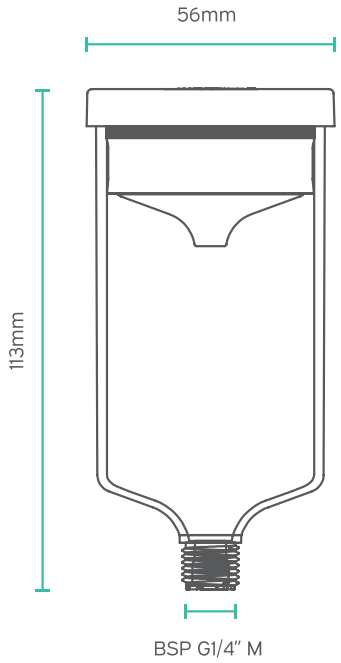

PRECAUTIONS

MEASUREMENTS

	Quickluber 30cc	Quickluber 60cc	Quickluber 120cc
Dimentions	56 x 56 x 64 mm	56 x 56 x 83 mm	56 x 56 x 113 mm
Weight (empty)	41 gr	51 gr	71 gr
Weight (full)	~65 gr	~100 gr	~170 gr

GENERAL

Description	
Power generation	Hydrogen gas producing drycell
Working pressure	Max. 5 bar
Adjustment	Stepless 1–12 months
Operating temperature	–20°C to +55°C
Ingress protection	IP68 (dust- and waterproof)
Usage period	Activation within 2 years of production date.
Storage temperature	Recommended at 15°C.

TEMPERATURE / OUTPUT RATE

QUICKLUBER 30CC

The output rate can be adjusted as required, depending on the ambient temperature. It is here expressed in terms of emptying duration (months).

Temperature	1 month [1 ml/day]	3 months [0.33 ml/day]	6 months [0.17 ml/day]	9 months [0.11 ml/day]	12 months [0.08 ml/day]

–20°C	-	4	7.5	10	-
4°C	-	3	6.5	9.5	
20°C	1	3	6	9	12
40°C	1	2.5	5.5	8	10.5
55°C	1	2	4	6.5	8.5

QUICKLUBER 60CC

Temperature	1 month [2 ml/day]	3 months [0.66 ml/day]	6 months [0.34 ml/day]	9 months [0.22 ml/day]	12 months [0.16 ml/day]
–20°C	-	4	7.5	10	-
4°C	-	3	6.5	9.5	
20°C	1	3	6	9	12
40°C	1	2,5	5.5	8	10.5
55°C	1	2	4	6.5	8.5

QUICKLUBER 120CC

Temperature	1 month [4 ml/day]	3 months [1.32 ml/day]	6 months [0.68 ml/day]	9 months [0.44 ml/day]	12 months [0.32 ml/day]
–20°C	-	4	7.5	10	-
4°C	-	4	6.5	9.5	
20°C	1	3	6	9	12
40°C	1	2.5	5.5	8	10.5
55°C	1	2	4	6.5	8.5

The stated values are based on laboratory conditions using a Quickluber filled with MultiMemo 2 grease, with no counterpressure. In real-world applications, especially at low temperatures, dispensing performance may vary depending on the type of grease used.

counterpressure or resistance in the lubrication lines, ambient temperature, grease viscosity.

START-UP TIME

Quickluber requires a brief start-up period before it begins dispensing lubricant. The duration of this start-up time depends on factors such as the selected dispensing period, cartridge size, and ambient temperature.

At an ambient temperature of 20 °C and a 12-month dispensing setting, initial lubricant discharge typically begins within one week. In colder environments (e.g., –20 °C) or when using smaller cartridges (30 ml), the start-up time may be approximately twice as long.

To accelerate the start-up process under such conditions, you can temporarily set Quickluber to a 1-month dispensing interval for one to two days before switching to your preferred dispensing duration.

INSTALLATION GUIDELINES

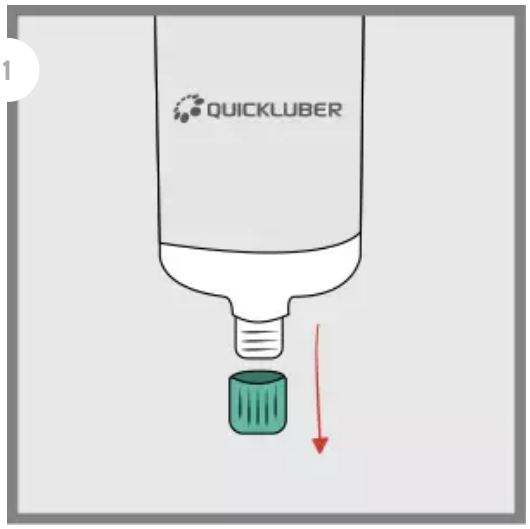

Open the lubricator outlet by removing plug.

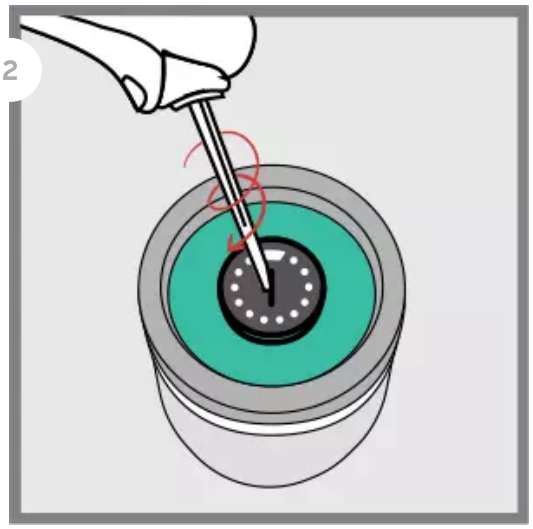

To initiate your Quickluber, first set the cap setting on the "12" position using a screwdriver or a coin.

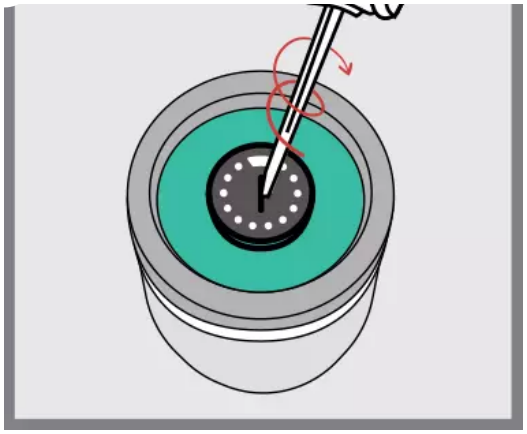

Turn back to your desired dispensing time, stepless in months, 1–12, using a screwdriver or a coin.

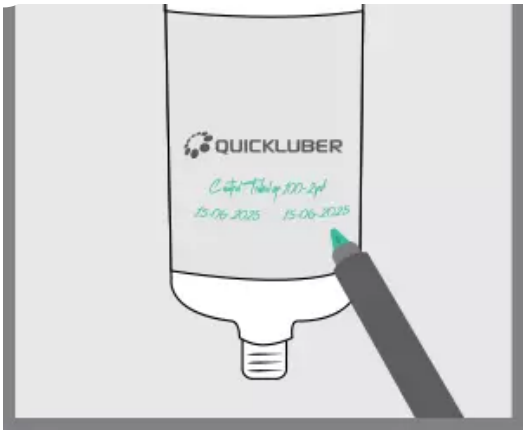

Note the starting date on the label using a waterproof pen.

5

Clear grease lines and fill them with the appropriate grease. Screw your Quickluber onto the greasing point.

RECYCLING GUIDELINES

Unscrew gas generator and dispose of complete unit for battery recycling. Note: Do not detach lubricator near an open flame.

Dispose of empty housing for plastic recycling. If the lubricator still contains lubricant after use, please dispose of it in accordance with local regulations.

FREQUENTLY ASKED QUESTIONS

Why does the lubricant output rate change with ambient temperature?

How long does it take for the Quickluber to build full pressure?

What types of grease can be used in the Quickluber?

Can I install the Quickluber away from the lubrication point?

How can I tell if my Quickluber is injecting grease into my bearing?

When should I replace my Quickluber?

REGULATORY INFORMATION

CE	This product is compliant with Directives 2006/42/EC (Machinery). The relevant Declaration of Conformity is available here .
UK CA	This product is compliant with UK regulations 2008 No. 1597 (Supply of Machinery). The relevant Declaration of Conformity is available here .
EAC	This product is compliant with customs union technical regulation TR CU 010/2011 (safety of machines and equipment). The relevant Declaration of Conformity is available here .
	The WEEE symbol is attached to the product in compliance with the EU directive 2012/19/EU on Waste Electrical and Electronic Equipment (WEEE). It is intended to deter the improper disposal of this product and to promote reuse and recycling.
	The packaging material can be recycled. Please arrange for the environmental appropriate disposal of the packaging.

BOLLINCKXSTRAAT 43
1070 BRUSSELS

+32 2 559 77 22
INFO@MEMOLUB.COM

VAT: BE0462320311

NAVIGATION.

About
News
Technology
Products
Become a distributor

john.doe@mail.com SUBSCRIBE

GET SOCIAL.

A BRAND

COPYRIGHT ©2026 QUICKLUBER. ALL RIGHTS RESERVED.